Damping Optimization for a 3D Printed Thermoplastic Lunar Rover Structure

Queen's University

Adam McKenzie

Il Yong Kim

Canadian Space Agency

Marie-Josée Potvin

Anton Sura

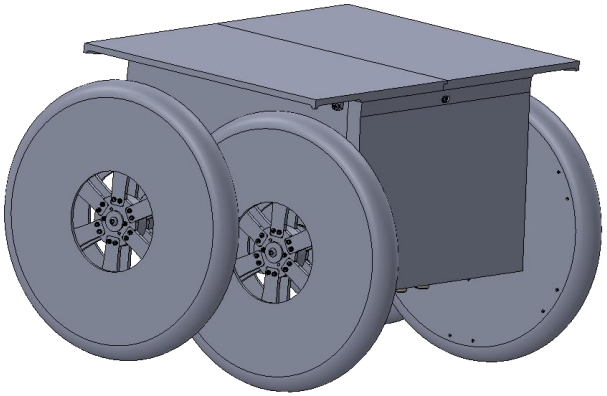

Ilyongkim.ca

November 2, 2022

PEEKbot Project

Background

PEEKbot Project

Damping

Typical Applications

Insufficient Damping

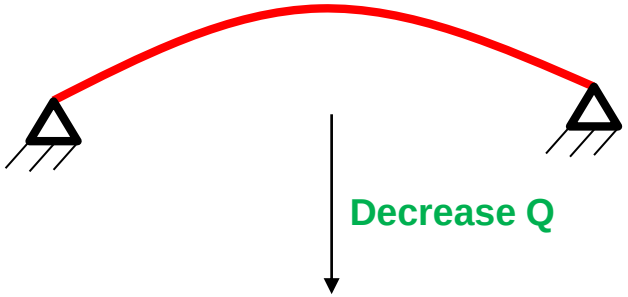

Sufficient Damping

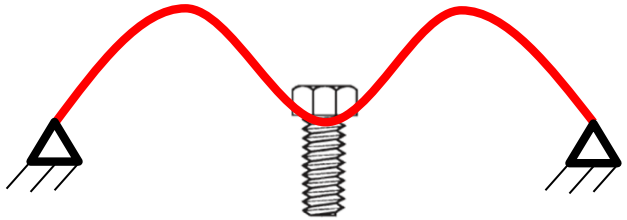

PEEKbot

- 3D printed structure (minimal fasteners)
- Damping comes from geometry and material
- Optimization is required

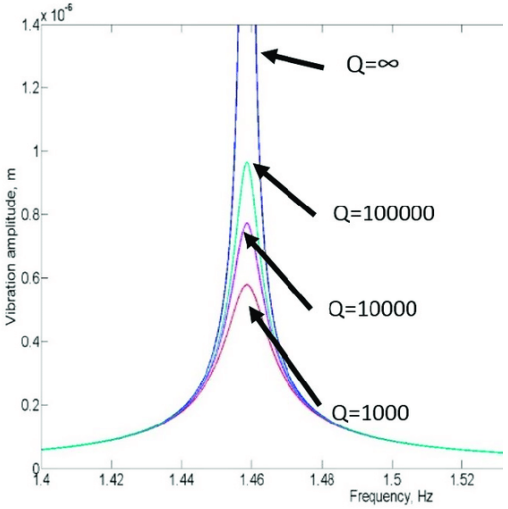

[3]

Damping is typically measured using a Q factor

Background

Viscoelastic Material

- PLA (poly lactic acid) will be used in this research
- PLA is a stiff viscoelastic material

Structural Context

Damping Context

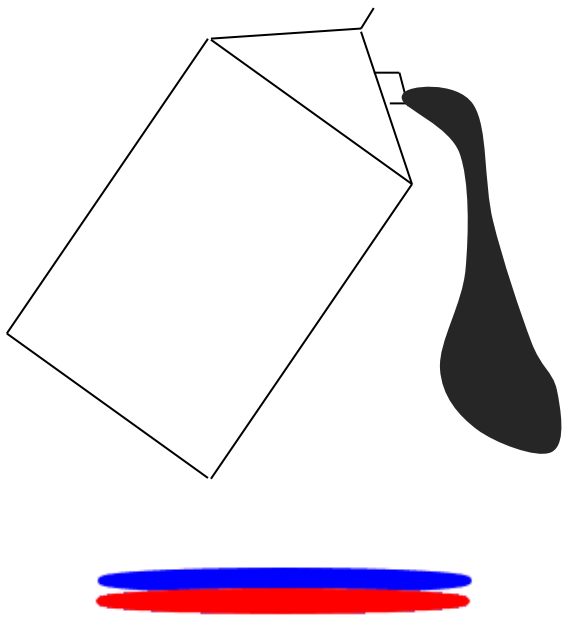

Damping Optimization

Proposed Method

- Changing the local skin thickness
- Original skin thickness 1 mm
- Allow the each element on the skin to choose a thickness between 0.5 mm to 1.5 mm

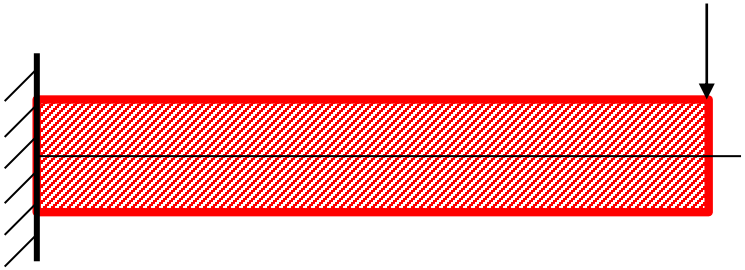

Original

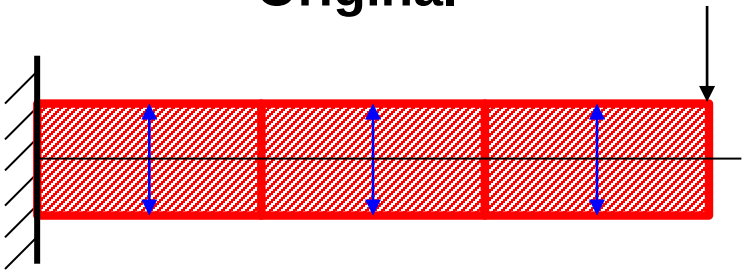

Optimized

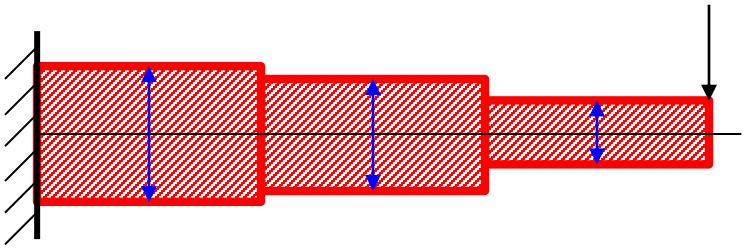

Damping Optimization

Setup

- **Only the skin on the base panel of the rover is optimized**
  - **Minimize computational expenses**
  - **Most of the damping is expected to come from the base panel**
  - **Altair's OptiStruct is used for analysis**

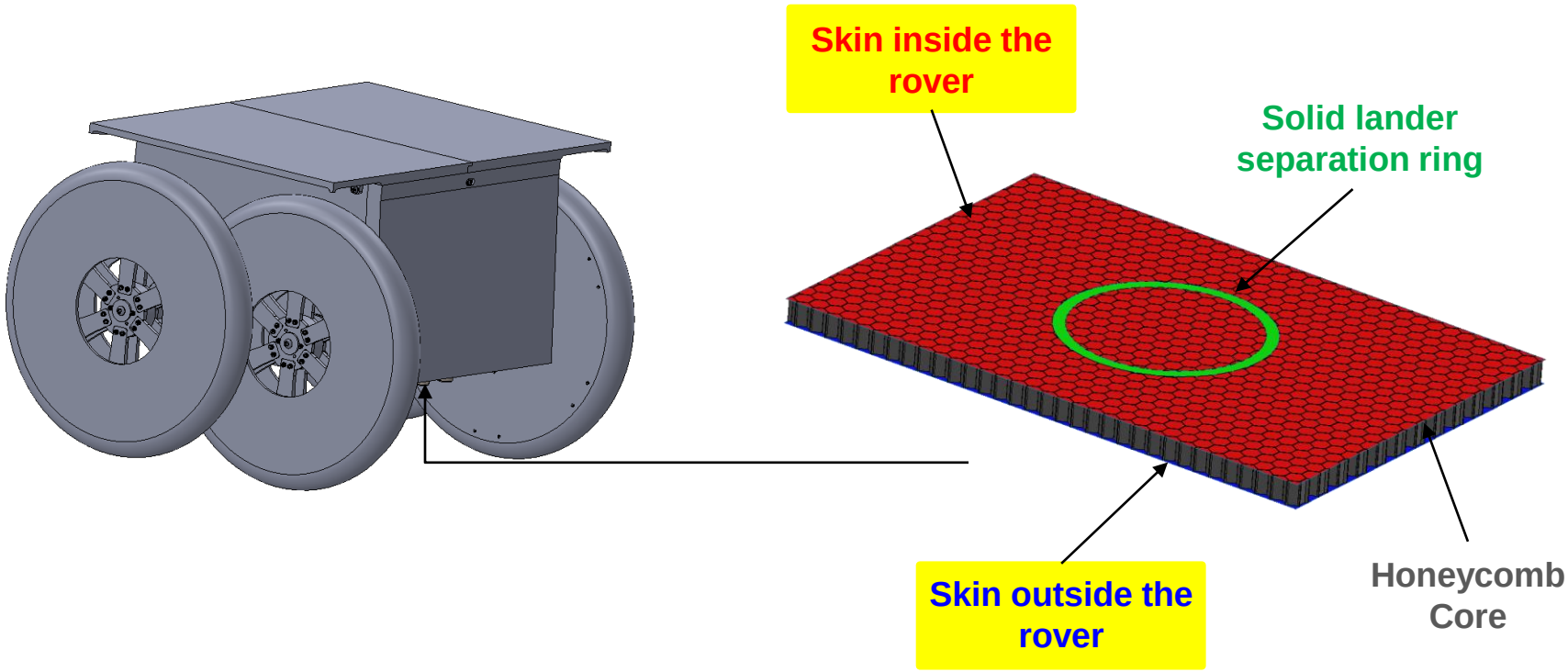

Damping Results

- The base panel model is the most extreme case
- Modes under 500 Hz optimized
  - A frequency range of up to 2000 Hz will be needed in the future
- The optimized design has 9.3% less mass than the baseline

Q Factor

Mode	Baseline	Optimized	% Difference
1	37.1 (122 Hz)	25.35 (133 Hz)	32.8%
2	46.5 (316 Hz)	46.3 (363 Hz)	0.6%

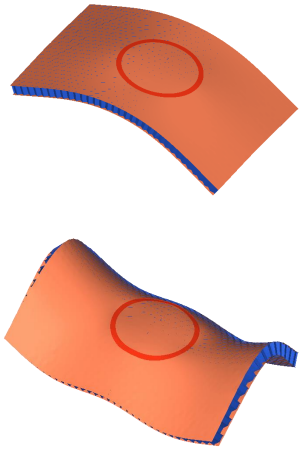

Thickness Results

Skin Thickness (mm)

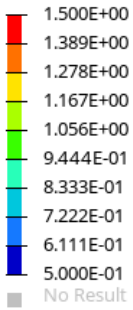

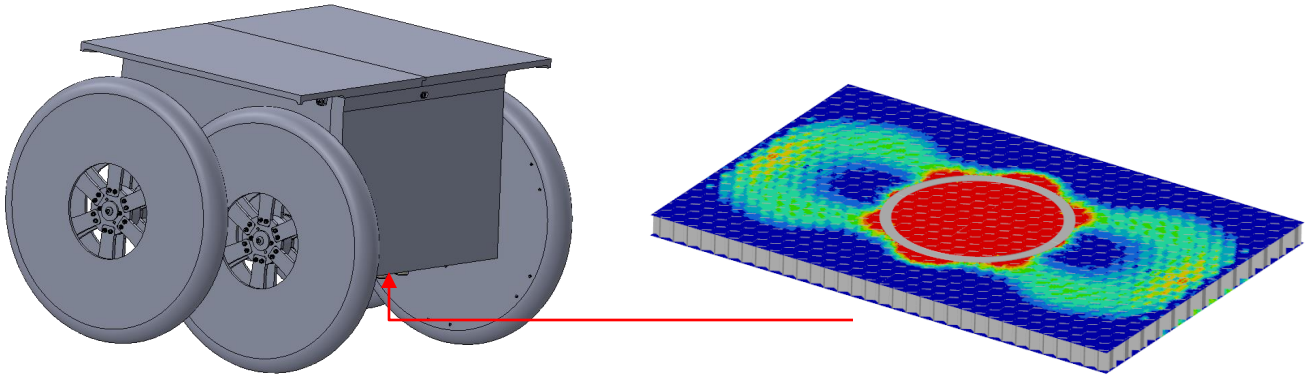

Inside the rover

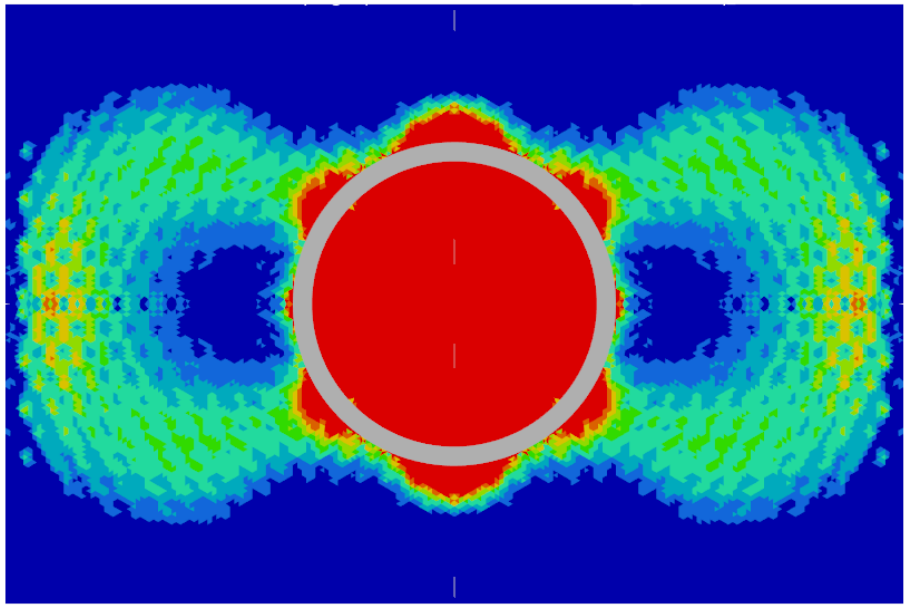

Outside the rover

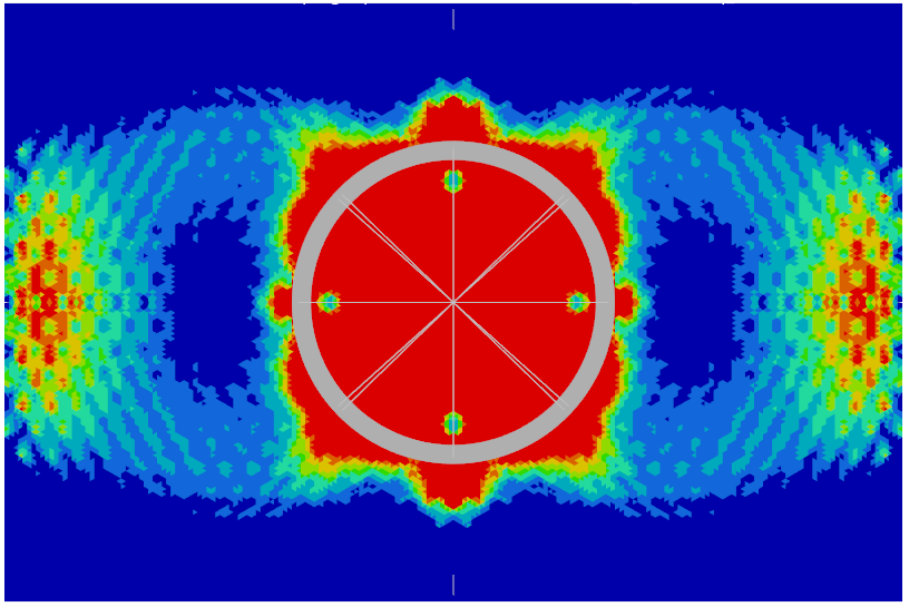

Summary

- The first mode was successfully damped
- The skin thickness may not add damping to all modes
- Total mass was decreased by ~10%
- Further optimizations are required

Inside the rover

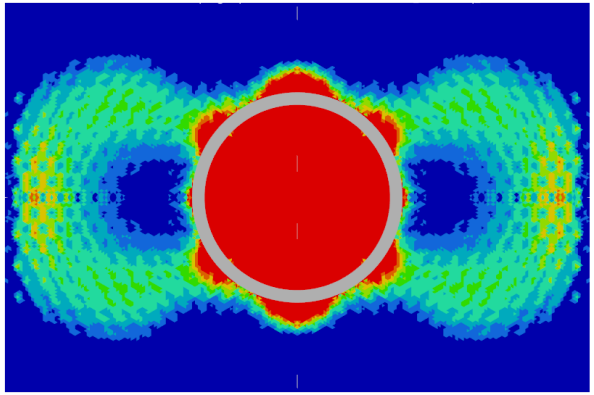

Outside the rover

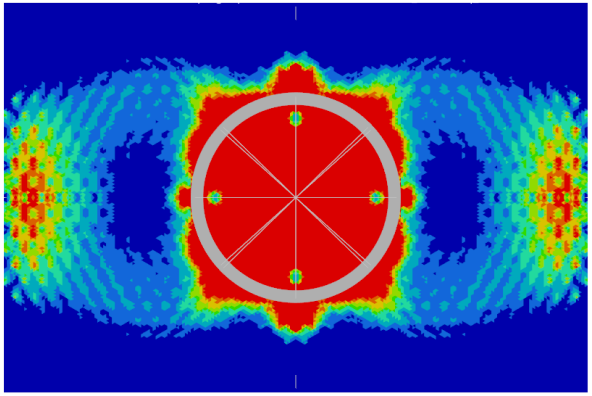

Future Work

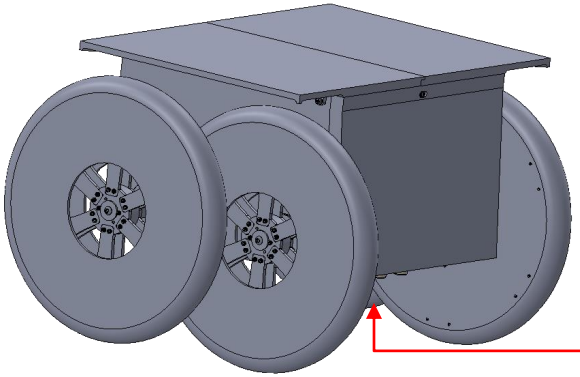

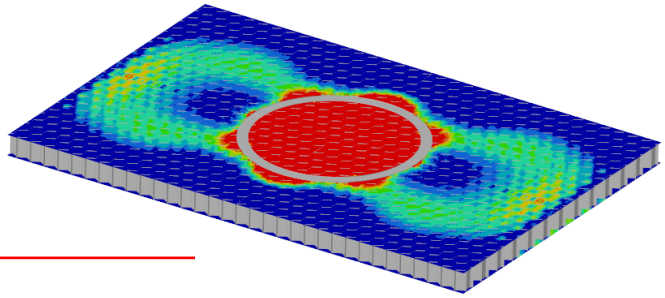

Parameter Study (Now)

Optimize core structure

Integrate optimized panel into full rover structure

Incorporate PEEK with CF

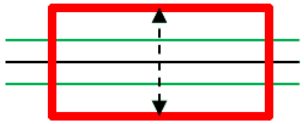

Thickness Bounds

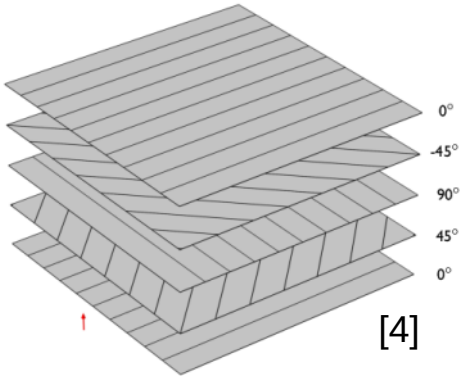

[4]

References

[1] SpaceX [@spacex], "More Falcon 9 launch and landing photos → http://flickr.com/spacex https://t.co/FIKkAH1EwU," *Twitter*, Nov. 22, 2020. https://twitter.com/spacex/status/1330362669837082624 (accessed Oct. 21, 2022).

[2] "There's Water on the Moon?," *Moon: NASA Science*. https://moon.nasa.gov/news/155/theres-water-on-the-moon (accessed Oct. 21, 2022).

[3] A. Ramanan, Y. Teoh, W. Ma, and W. Ye, "Characterization of a Laterally Oscillating Microresonator Operating in the Nonlinear Region," *Micromachines*, vol. 7, p. 132, Aug. 2016, doi: 10.3390/mi7080132.

[4] "Stacking Sequence." https://doc.comsol.com/5.5/doc/com.comsol.help.compmat/compmat_ug_modeling.3.09.html (accessed Oct. 11, 2022).

[5] S. C. Woody and S. T. Smith, "Damping of a thin-walled honeycomb structure using energy absorbing foam," *J. Sound Vib.*, vol. 291, no. 1, pp. 491–502, 2006, doi: https://doi.org/10.1016/j.jsv.2005.06.001.

[6] P. Aumjaud, C. W. Smith, and K. E. Evans, "A novel viscoelastic damping treatment for honeycomb sandwich structures," *Compos. Struct.*, vol. 119, pp. 322–332, 2015, doi: https://doi.org/10.1016/j.compstruct.2014.09.005.

STRUCTURAL AND MULTIDISCIPLINARY SYSTEMS DESIGN GROUP

Thank You!

Preliminary Optimization

Minimize: $Q_{NewMethod}(\rho)$

Subject to: $MassFraction \leq 0.8$

$0.5 \leq \rho_i \leq 1.5$

where ρ is the thickness of element i;

Mass fraction is the fraction of mass in the design space only

Acceleration magnitudes applied from the Falcon 9 manual

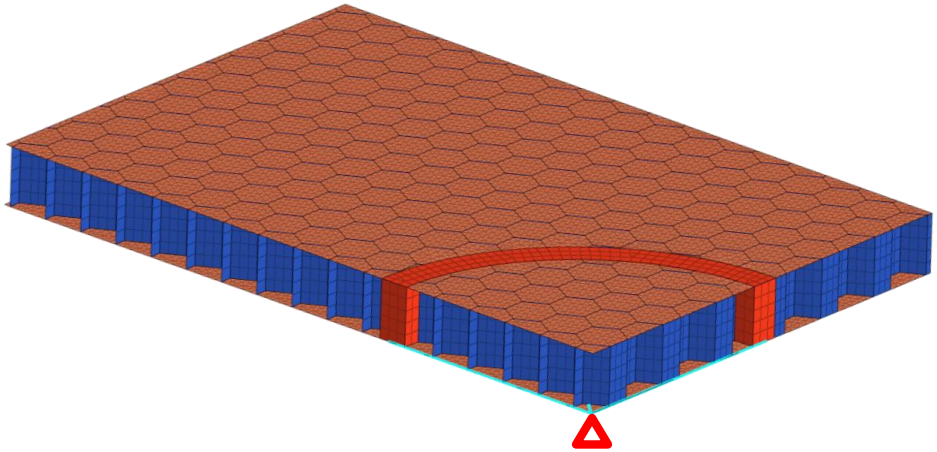

The lander attachment points are all attached to a centre node using RBE3 elements where the accelerations and fixed boundary constraint are applied

Modal Effective Mass

- **Modal effective mass shows how important each mode is**
  - **Gives localized modes a small modal effective mass**
- **A sum of 95% mass in a DOF means all of the important modes have been found**
  - **Only the modes under 2000 Hz are required to be damped**

Mode #	Freq [Hz]	X-Tran	Y-Tran	Z-Tran	X-Rot	Y-Rot	Z-Rot	MAX
1	122	0%	42%	0%	39%	0%	88%	88%
2	316	0%	7%	0%	41%	0%	1%	41%
3	492	0%	9%	0%	4%	0%	2%	9%
4	760.3	0%	1%	0%	0%	0%	2%	2%
5	1051	21%	0%	2%	0%	14%	0%	21%
6	1077	34%	1%	6%	1%	29%	0%	34%
7	1171	1%	16%	1%	3%	1%	2%	16%
8	1323	0%	0%	0%	1%	0%	0%	1%
9	1401	3%	0%	0%	0%	12%	0%	12%
10	1503	0%	1%	0%	0%	0%	1%	1%
11	1676	1%	2%	3%	2%	1%	0%	3%
12	1712	8%	0%	39%	0%	14%	0%	39%
13	1938	0%	1%	2%	0%	0%	0%	2%
14	2048	0%	3%	4%	3%	0%	0%	4%
SUM		**68%**	**84%**	**56%**	**94%**	**72%**	**96%**	

Baseline

Mode	Freq [Hz]	X-TRAN	Y-TRAN	Z-TRAN	X-ROT	Y-ROT	Z-ROT	Max
1	133	0%	36%	0%	32%	0%	85%	85%
2	362.5	0%	5%	0%	38%	0%	1%	38%
3	550.8	0%	9%	0%	7%	0%	2%	9%
4	763.7	1%	0%	0%	1%	0%	2%	2%
5	1019	28%	1%	3%	0%	20%	0%	28%
6	1049	20%	0%	4%	0%	20%	0%	20%
7	1103	0%	21%	0%	5%	0%	2%	21%
8	1310	0%	0%	0%	1%	0%	0%	1%
9	1382	2%	0%	0%	0%	6%	0%	6%
10	1493	0%	1%	0%	0%	0%	1%	1%
11	1674	0%	3%	0%	2%	0%	0%	3%
12	1726	9%	0%	29%	0%	18%	0%	29%
13	1967	0%	0%	2%	0%	0%	1%	2%
14	2050	0%	5%	2%	4%	0%	0%	5%
SUM		**60%**	**82%**	**39%**	**92%**	**66%**	**95%**	

Optimized

Mode Shapes

Mode 1

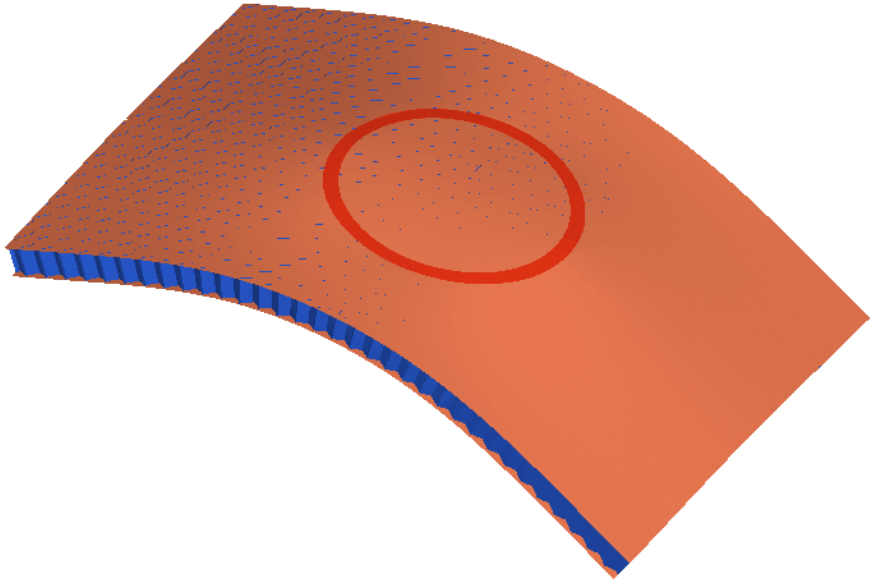

Mode 2

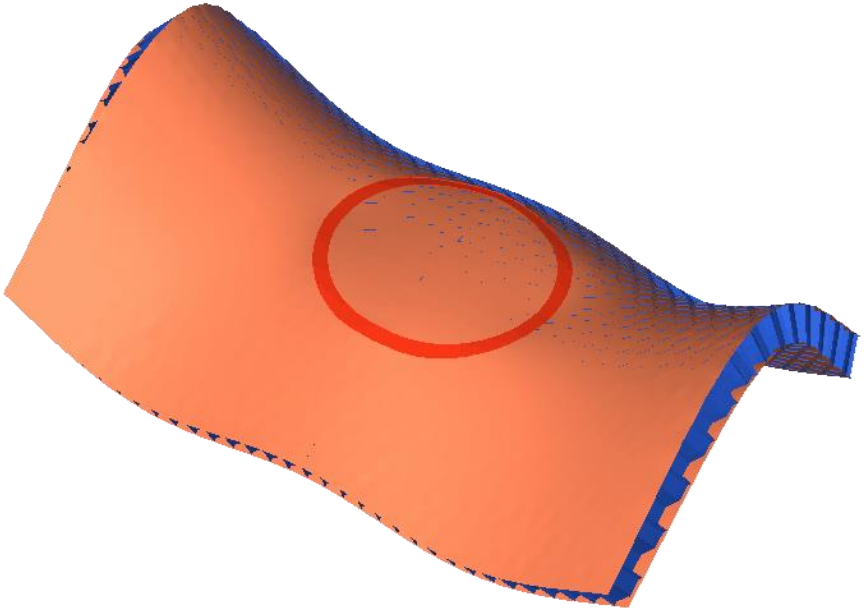

Background

Current Damping Methods

Unconstrained Layer Damping

Constrained Layer Damping

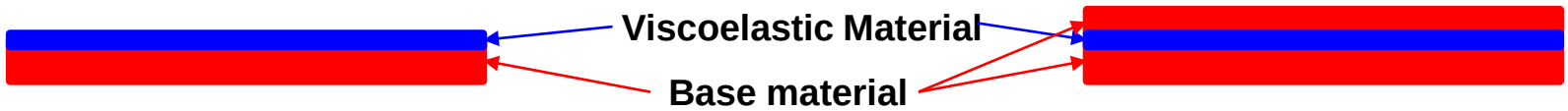

ALL METHODS ADD MASS

Void Filler

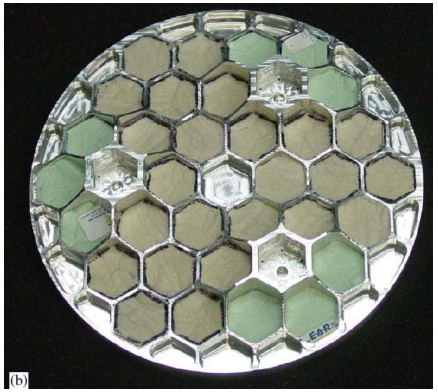

[5]

Double Shear Lap Joint

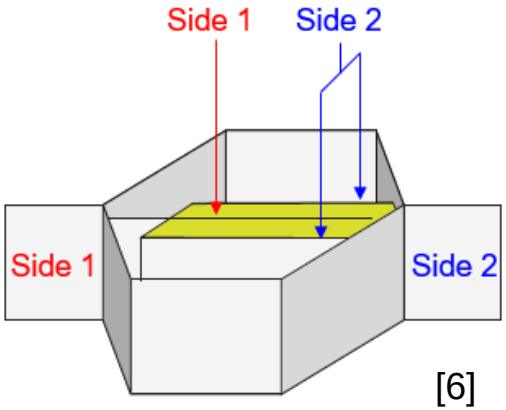

[6]