Performance Evaluation of Internal Flow in a Y-duct Intake at High Subsonic Mach Number

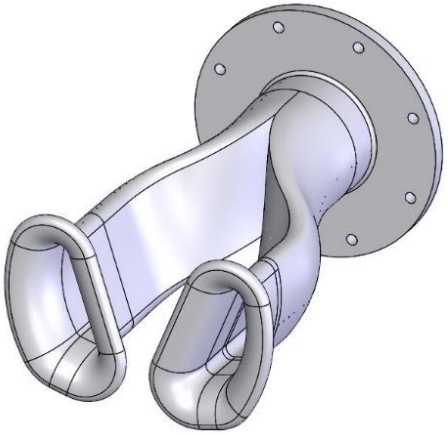

Asad Asghar, Satpreet Sidhu, William D. E. Allan

Department of Mechanical and Aerospace Engineering

Royal Military College of Canada, Kingston, Ontario, Canada

Robert Stowe, and Rogerio Pimentel

Valcartier Research Center

Defence Research and Development Canada

Québec, Québec, Canada

Introduction - Inlets

- Air intakes (or inlets);
- Curved S-duct with bends and offset for embedded engine;
- Separation and pressure losses
  - due to bends and diffusion;
- Aerodynamic Performance
  - Affects compressor performance and stability margin;
- Also useful for suppressing the radar signature of the compressor/fan.

https://www.pinterest.ca/pin/598626975457408215/

Introduction – Y-ducts

- Y-duct intakes on single engine aircraft:
  - Two inlets,
  - Offset could be in two planes;
- Configuration varies with aircraft design;
- Investigation needed for each design;
- Flow mechanism similar to S-duct with added complexity.

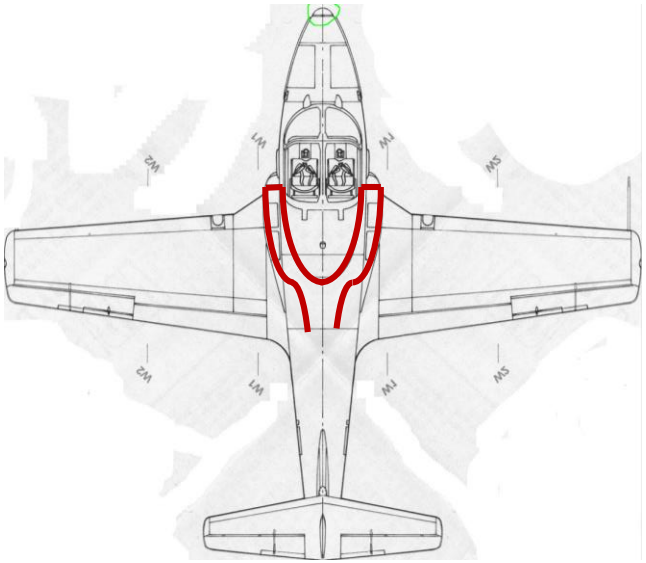

https://www.planespotters.net/photo/880306/114071-canada-royal-air-force-canadair-ct-114-tutor

https://wiki.flightgear.org/User:Owenpsmith/Preparing_drawings_for_modelling

Introduction – Geometry & Performance

Important geometric parameters:

- Diffusion ratio,
- Centreline curvature,
- Offset,
- Length,
- Entrance aspect ratio.

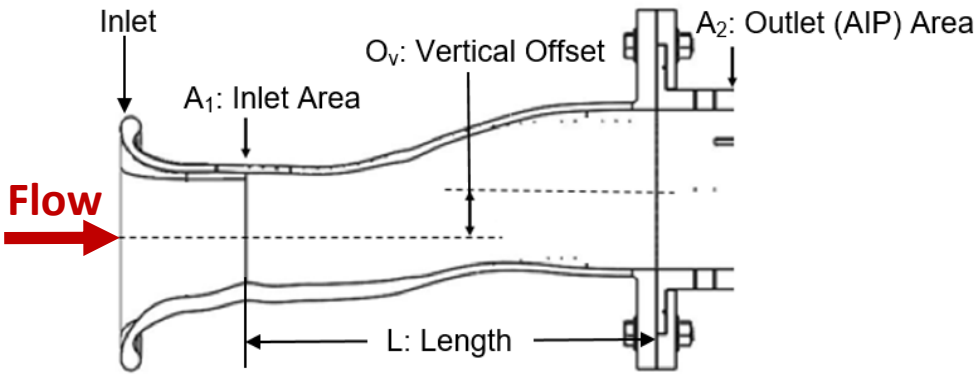

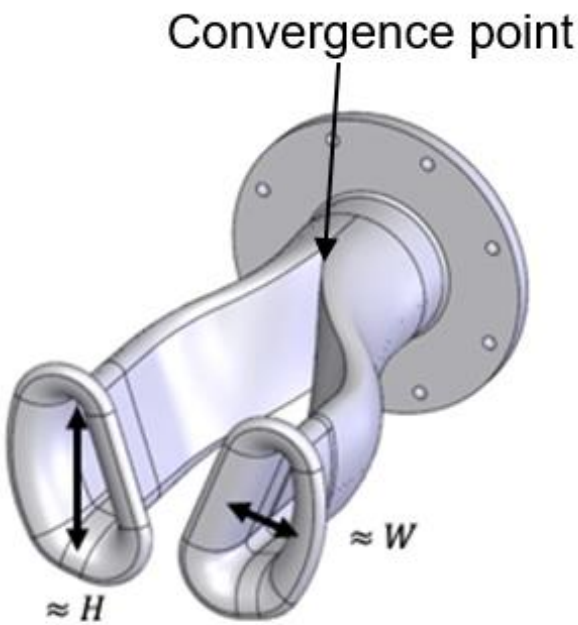

Goal and Objectives

Goal

- Investigate the aerodynamic performance of a generic Y-duct at higher subsonic Mach number.

Objectives:

- Design an experimental setup for Y-duct testing,
- Determine static pressure recovery, total pressure recovery, velocity and flow direction at the AIP.

Methodology – Experimental Setup

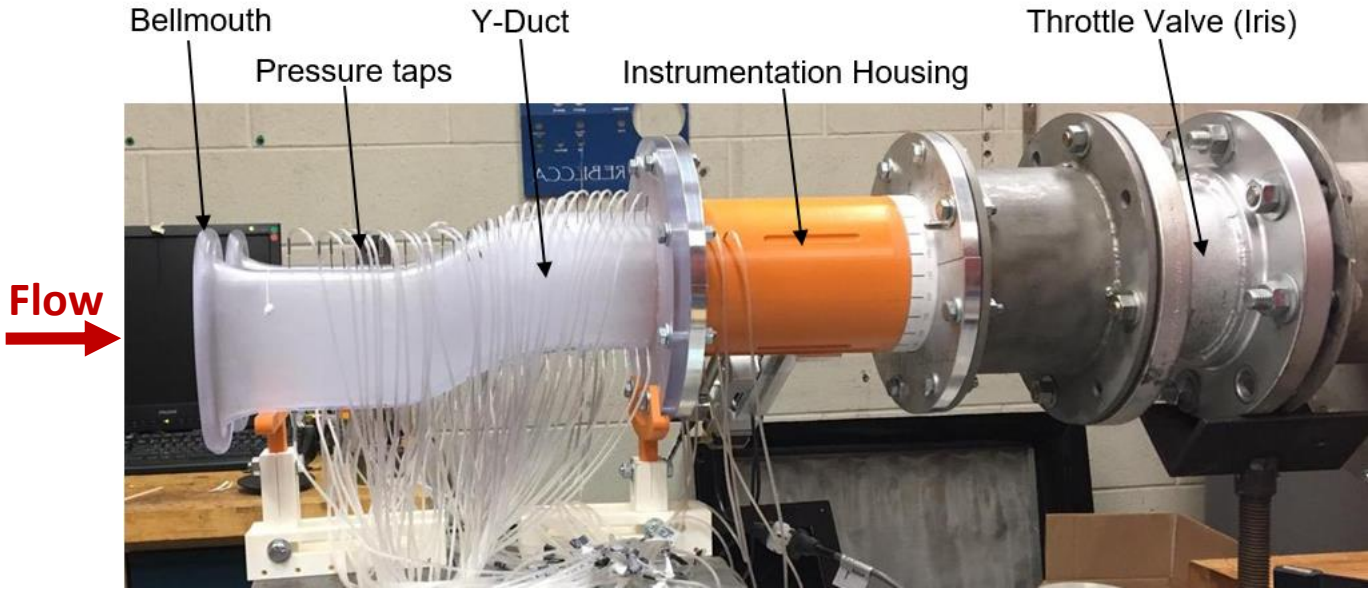

- RMC transonic wind tunnel;
- Bell-mouth inlet and vacuum exhaust;
- Mach number 0.63, set using iris valve;
- Run time 3 to 5 seconds;
- Rotatable instrumentation housing.

Methodology – Y-duct Test-Section

- Trapezoidal inlet with rounded corners and edges;
- Additively manufactured;
- High-density *Clearvue* plastic;
- Exit diameter 4 inch;
- Diffusion ratio 1.64;
- Offset/length 0.14 (vertical) and 0.29 (horizontal);
- 4 rows of longitudinal pressure taps (112 total).

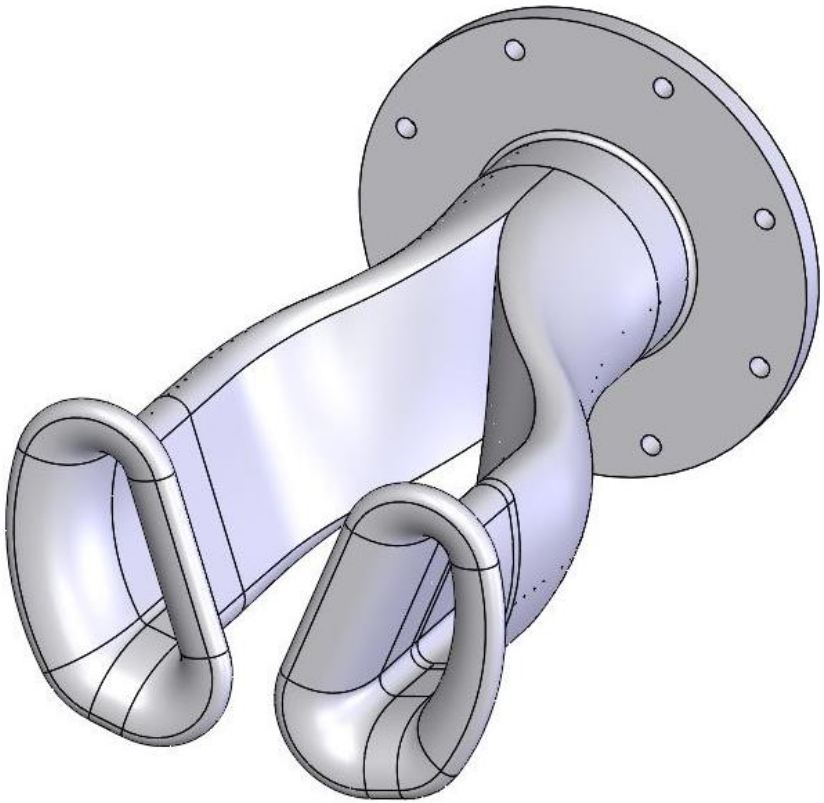

Methodology – Measurement

Total pressure, velocity, and flow direction at the AIP:

- Aeroprobe 5-hole fast-response pressure probe;
- Radially traversed;
- 30-deg circumferential increments using rotatable housing.

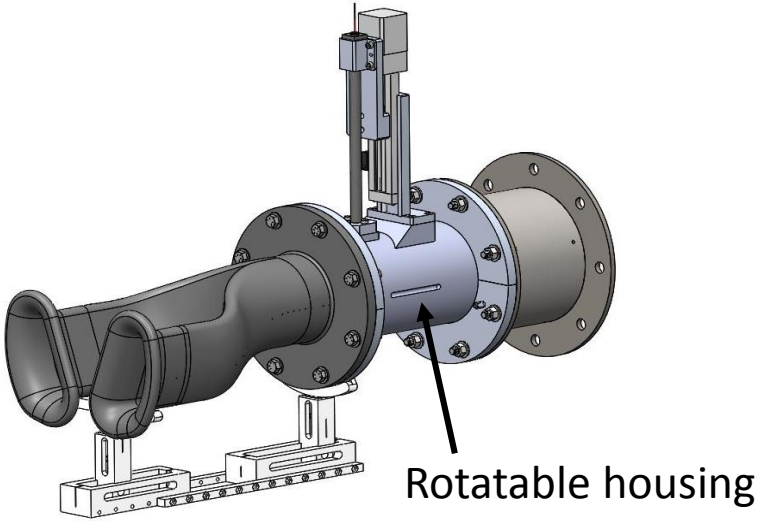

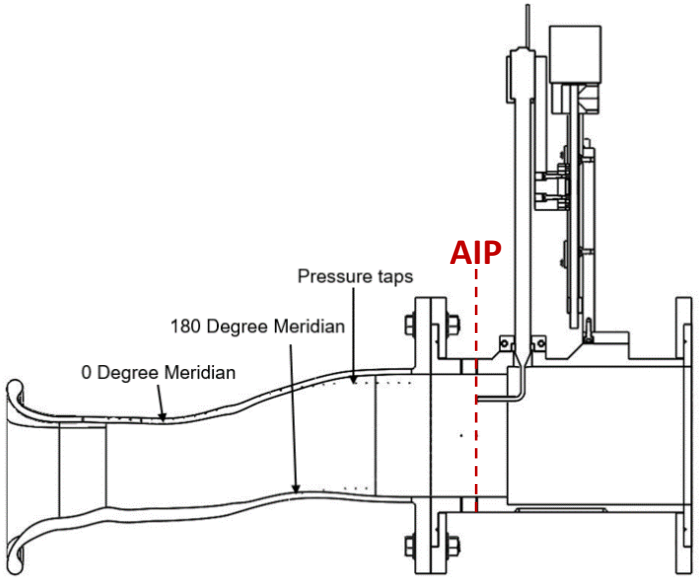

Methodology – CFD

CFD:

- Limited numerical study;
- But at slightly higher Mach number of 0.8;
- Reynolds-averaged Navier-Stokes calculations;
- ANSYS Fluent;
- RKE turbulence model.

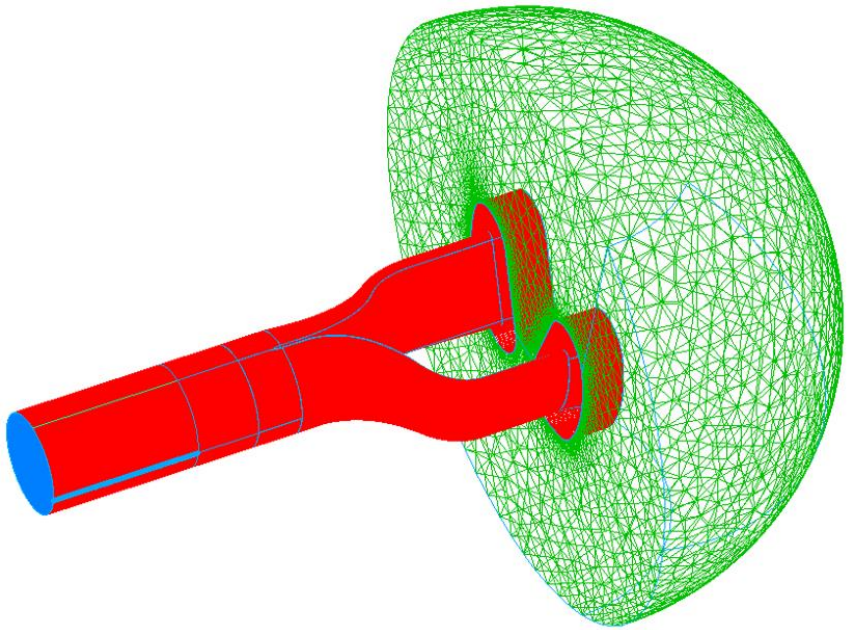

Hancock and Ingram (2021)

Results

Results will include:

- Static pressure distribution;
- Total pressure at AIP;
- Flow distortion;
- Swirl.

Results – Longitudinal Static Pressure

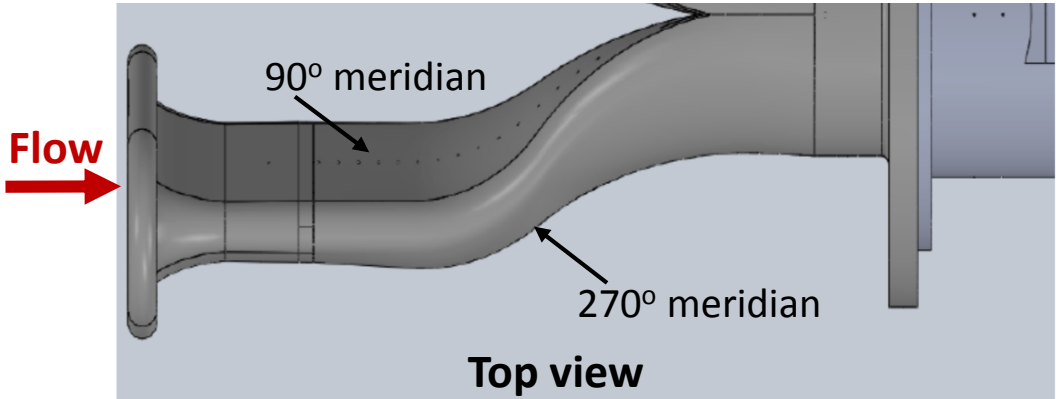

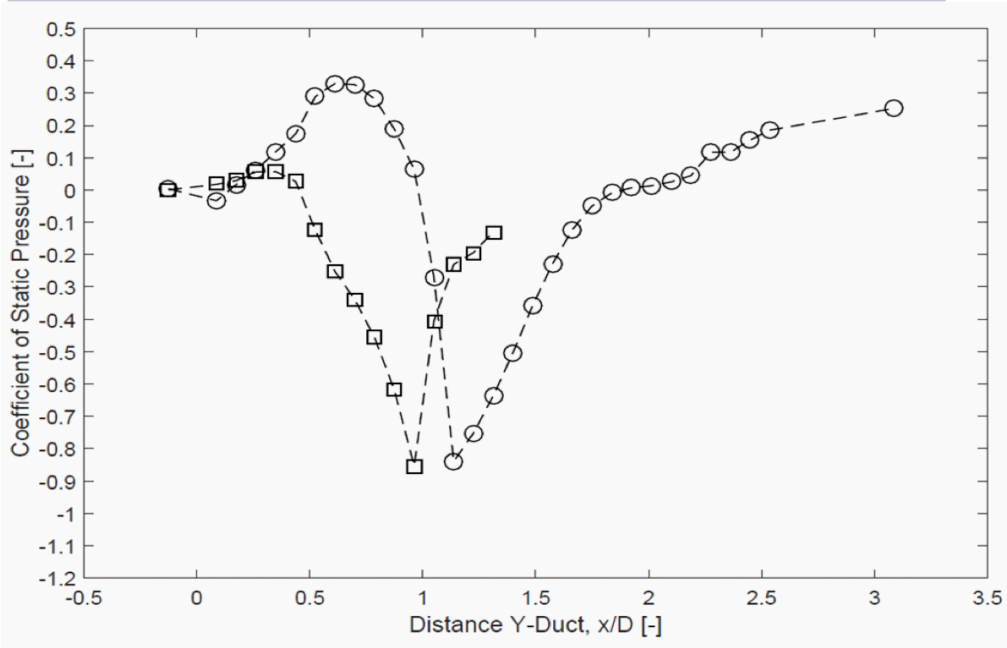

Static pressure along 90-deg (▫)and 270-deg (○)

Results – Longitudinal Static Pressure

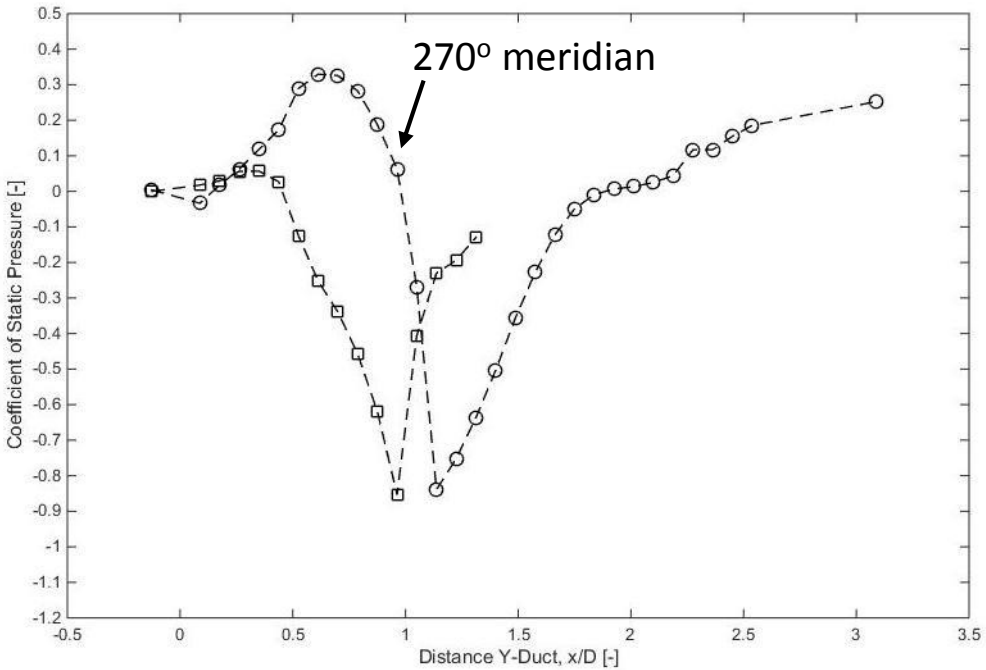

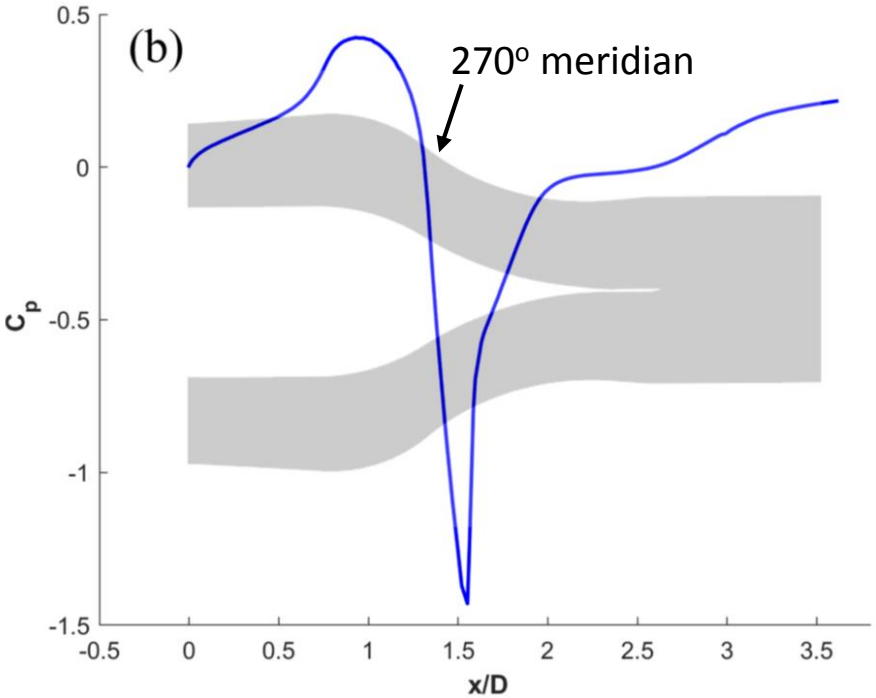

Comparison with computed static pressure at Mach 0.8

Results – Total Pressure Ratio at AIP

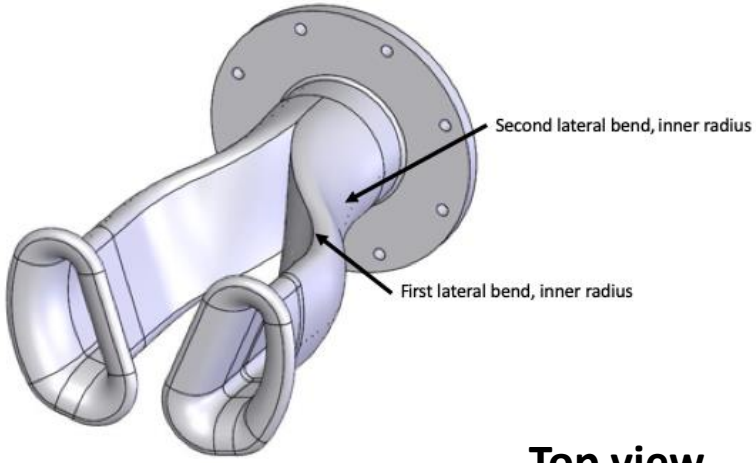

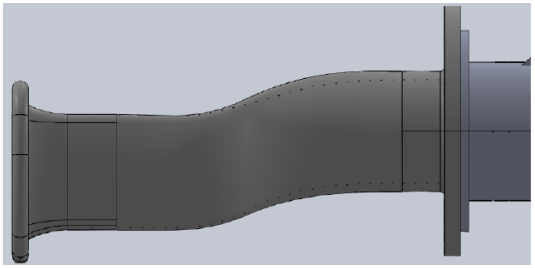

Side view

Top view

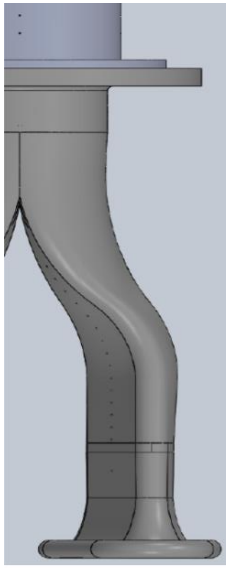

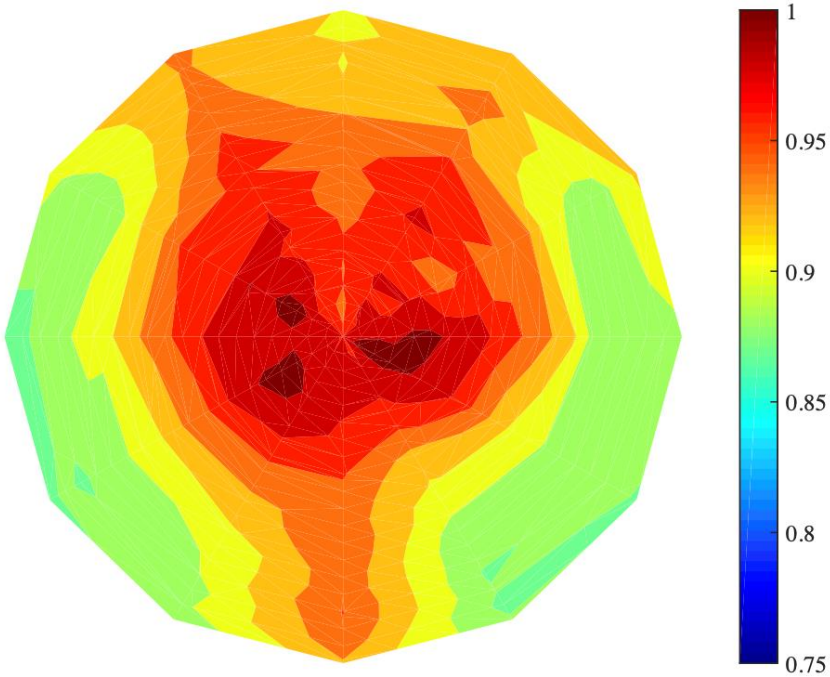

Total pressure ratio in perspective with Y-duct

Results – Total Pressure Ratio at AIP

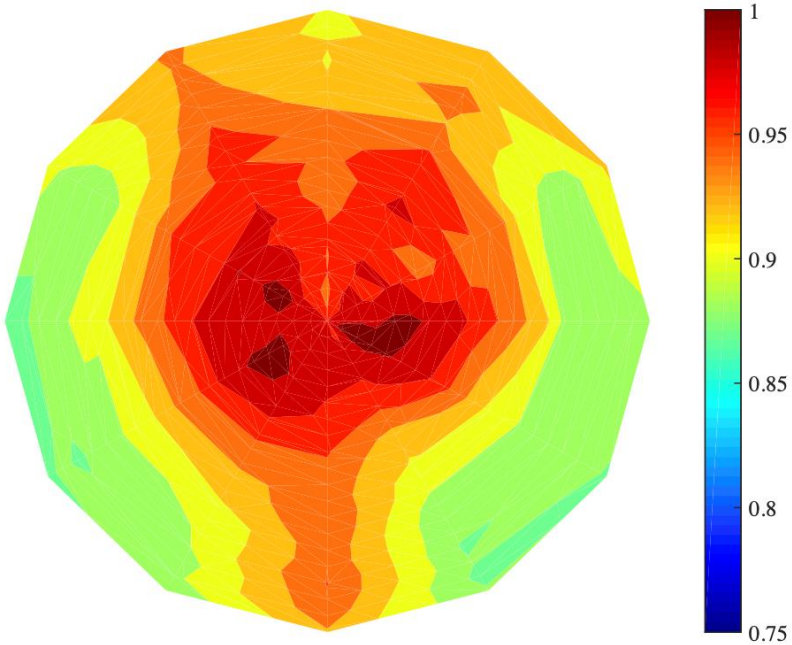

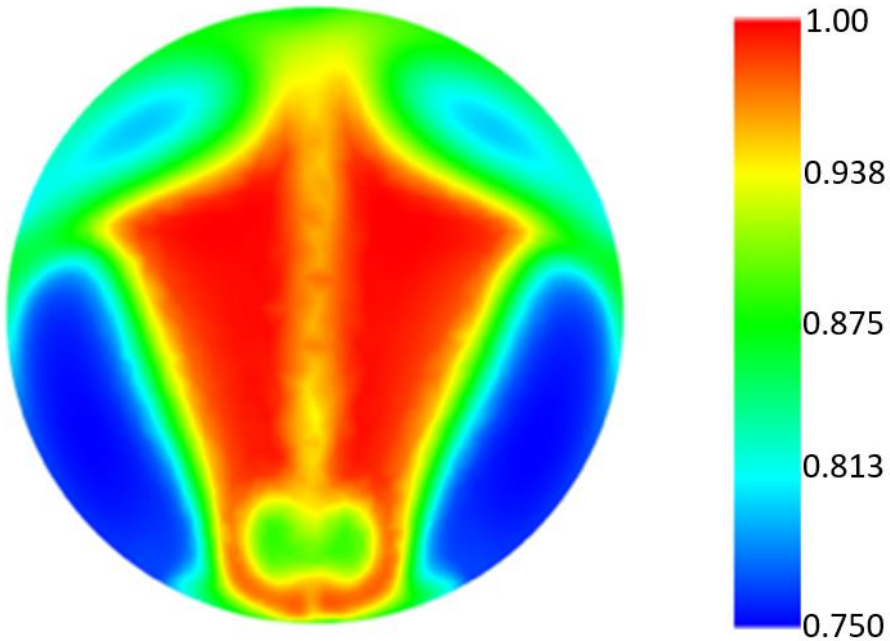

Comparison with computed total pressure at Mach 0.8

Results – Total Pressure Recovery

$$\bar{\pi} = \overline{\left[\frac{p_{0,2}}{p_{0,1}}\right]}$$

	Ma	$\bar{\pi}$
Exp. Y-duct	0.63	0.9315
CFD Y-duct	0.80	0.887
Exp. S-duct	0.80	0.98

Y-duct total pressure recovery coefficient

Results – Swirl Angle at AIP

$$\alpha = \operatorname{atan}\left(\frac{v_\theta}{u}\right)$$

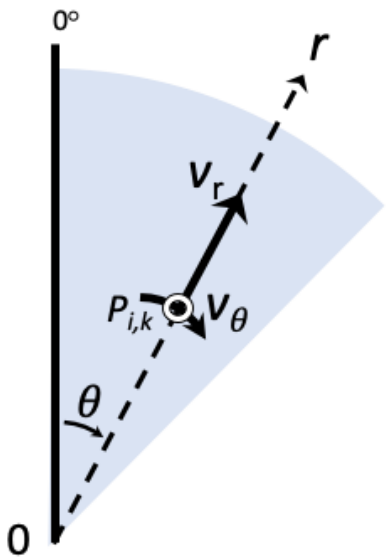

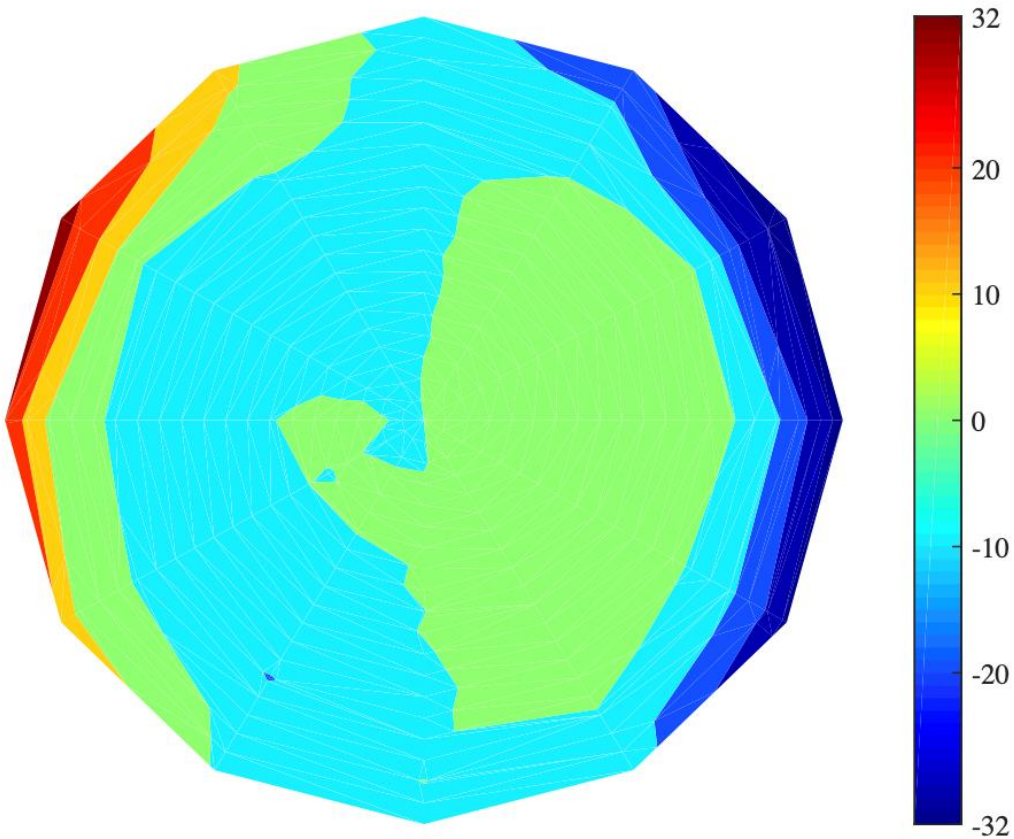

Looking downstream

Results – Swirl at AIP

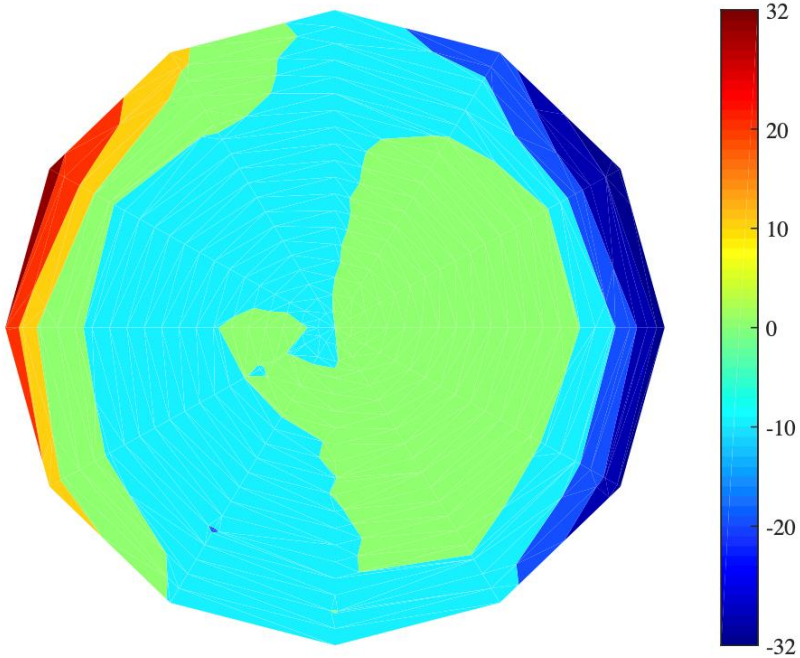

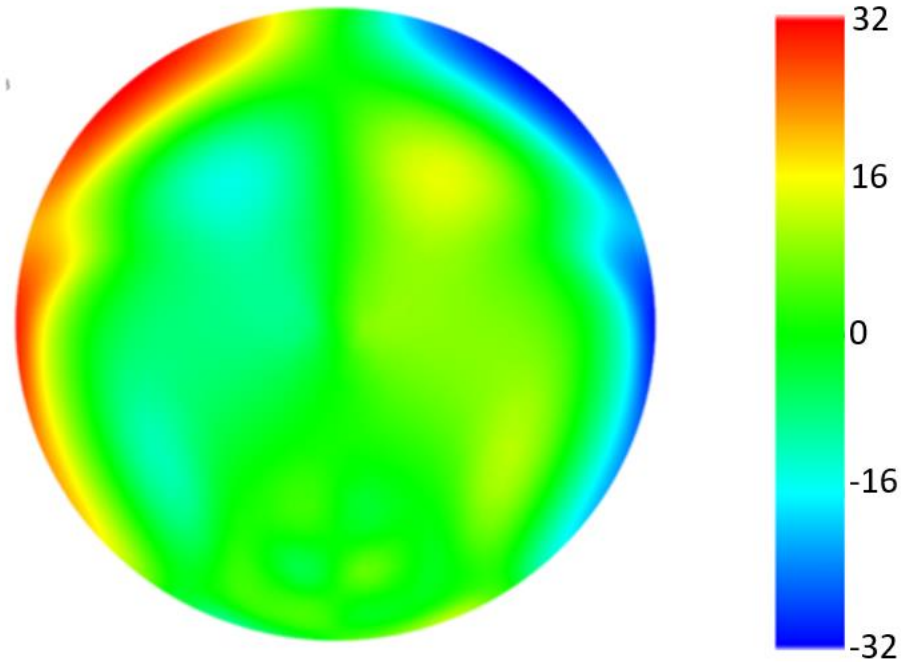

Swirl comparison with computed swirl at Mach 0.8

Conclusions

- A generic Y-duct intake was designed and constructed;
- Preliminary measurement and simulation show encouraging results;
- More detail of methodology and results will be presented in CASI-Aero 2021 conference;
- The measurement at moderately high subsonic Mach number will provide database for design of double entrance Y-ducts.